WINDSOR

BASIN TAPS

No	.Description	Product Code	Fixings included	Gross Weight	Net Weight
1	Windsor	SK1037	YES		

DIAGRAMS NOT TO SCALE
ALL DIMENSIONS IN MM
TOLERANCE OF ± 5MM

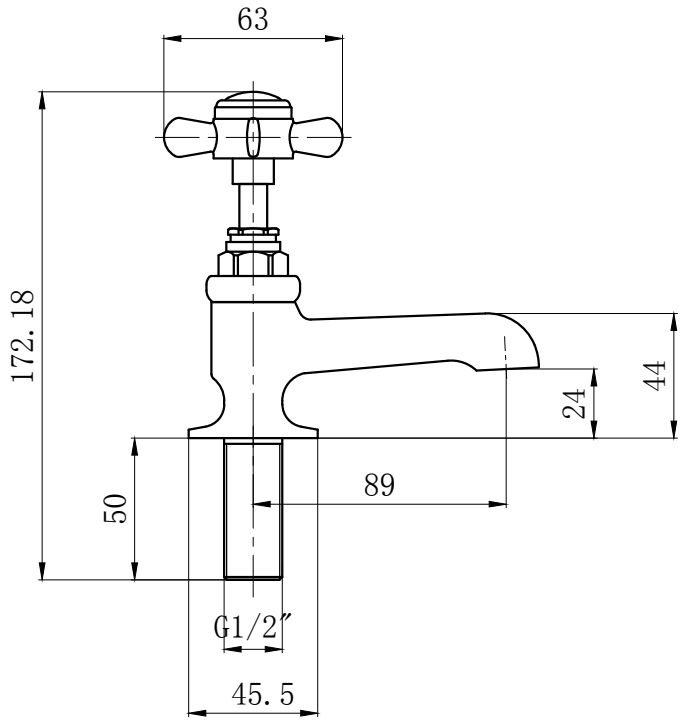

FAQ's

Soakology Unit 5, Brassmill Lane Enterprise Centre, Bath, BA1 3JN
t. 0845 862 9888 e. contact@soakology.co.uk w. www.soakology.co.uk